VEGETABLE PREPARATION MACHINE CA-401 VV (VARIABLE SPEED)

Commercial vegetable preparation machine with an hourly output of up to 650 Kg.

Features and Benefits

✓ Electronic, user-friendly control board with 5 speeds.

✓ Stainless steel construction and highest quality material, all suitable for contact with good.

✓ New production technology that gives a uniform, highest-quality cutting result.

✓ Ergonomic design: product is sliced/cut/ shredded in one single movement.

✓ The large range of high quality discs and grids allows the operator to obtain over 70 different styles of product.

✓ Lateral product ejection, which allows the appliance to be placed in a less deep working surface.

✓ This directs the product avoiding splashing.

✓ Electronic, user-friendly control board with 5 speeds.

✓ Easily removable lever and lid for cleaning purposes.

✓ NSF-International certified appliance (complying with Hygiene, Cleaning and Food Material regulations).

✓ Sales Description

Variable speed motor block and a universal attachment.

Includes

✓ 1 speed motor block.

✓ Large capacity hopper.

✓ Core drill (optional use).

Accessories

- ❑ FC Slicing Disc
- ❑ FCC Curved Slicing Discs
- ❑ FCO Rippled Slicing Discs
- ❑ FFC Chipping Grids
- ❑ FMC Dicing Grids
- ❑ FCE Julienne Discs
- ❑ FR/SH Shredding & Grating Discs
- ❑ Long vegetable attachment
- ❑ Universal hopper
- ❑ Disc and Grid Holder Device
- ❑ Automatic Hopper
- ❑ Grid Cleaning Kit

DYNAMIC PREPARATION

COMMERCIAL VEGETABLE PREPARATION MACHINES

sammic | www.sammic.com
Food Service Equiment Manufacturer
Polígono Basarte, 1.
20720 Azkoitia, Spain
phone +34 943 15 72 36
sales@sammic.com

Project	Date
Item	Qty
Approved	

product sheet
updated 22/03/2019

VEGETABLE PREPARATION MACHINE CA-401 VV (VARIABLE SPEED)

Commercial vegetable preparation machine with an hourly output of up to 650 Kg.

Specifications

Hourly production: 200 Kg - 650 Kg

Inlet opening: 286 cm2

Disc diameter: 205 mm

Speeds as veg. slicer (positions): 5 (365 rpm - 1000 rpm)

Total loading: 1500 W

External dimensions (WxDxH)

Width: 391 mm

Depth: 400 mm

Height: 667 mm

Net weight: 30 Kg

Noise level (1m.): <70 dB(A)

Background noise: 32 dB(A)

Crated dimensions

435 x 430 x 600 mm

Gross weight: 35 Kg.

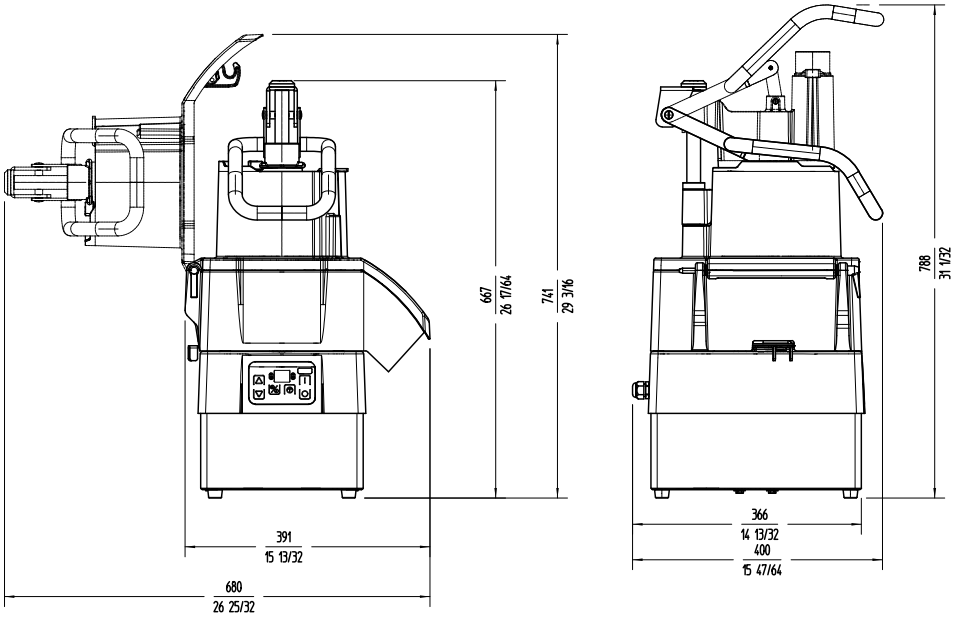

Available Models

1050356	Vegetable preparation machine CA-401VV 230/50-60/1 (variable speed)

** Ask for special versions availability*

sammic | www.sammic.com
Food Service Equiment Manufacturer

Polígono Basarte, 1.
20720 Azkoitia, Spain

phone +34 943 15 72 36
sales@sammic.com

Project	Date
Item	Qty
Approved	

DYNAMIC PREPARATION
COMMERCIAL VEGETABLE PREPARATION MACHINES

product sheet
updated **22/03/2019**